METROLOGYWORKS®

XP XTRA-PORTABLE

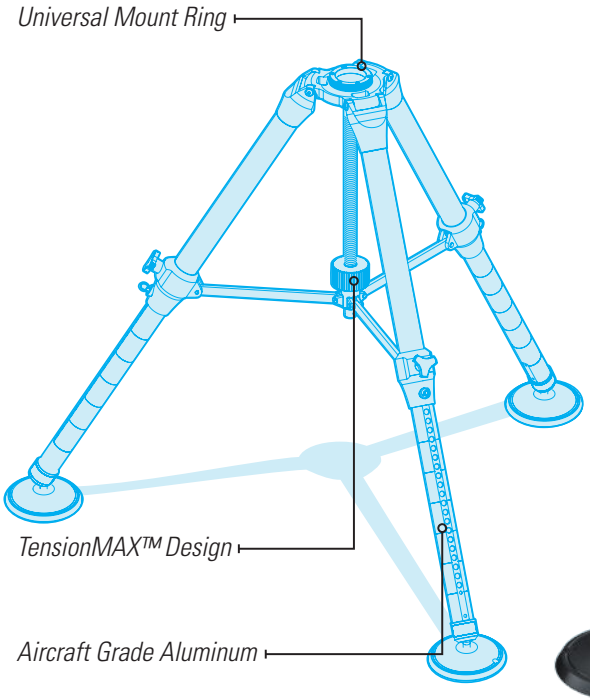

FEATURES / / / / /

- Billet Machined Major Components
- Aircraft Grade Aluminum Alloy
- Tapered Leg Locking Pin
- Lightweight
- 3 ½"-8 Universal Mount Ring (Stainless Steel)
- Tensioned when Fully Extended - TensionMAX™ Design
- Can Be Used at Any Angle with Center Sliding Clamp
- Accessory Hole for Adding Weight
- Round Feet Standard, Trilobe Feet Available

TENSIONMAX-XP

Americas, Asia-Pacific
sales@metrologyworks.com
Phone: 816-650-2266

Europe
sales.eu@metrologyworks.com
Phone: +49 33845 48994 0

TS_rev09062022
MWTS_TRIPOD-XP-TENSIONMAX

SPECIFICATIONS / / / / /

METROLOGYWORKS®

XP

PN: ***TRIPOD-XP-TENSIONMAX***

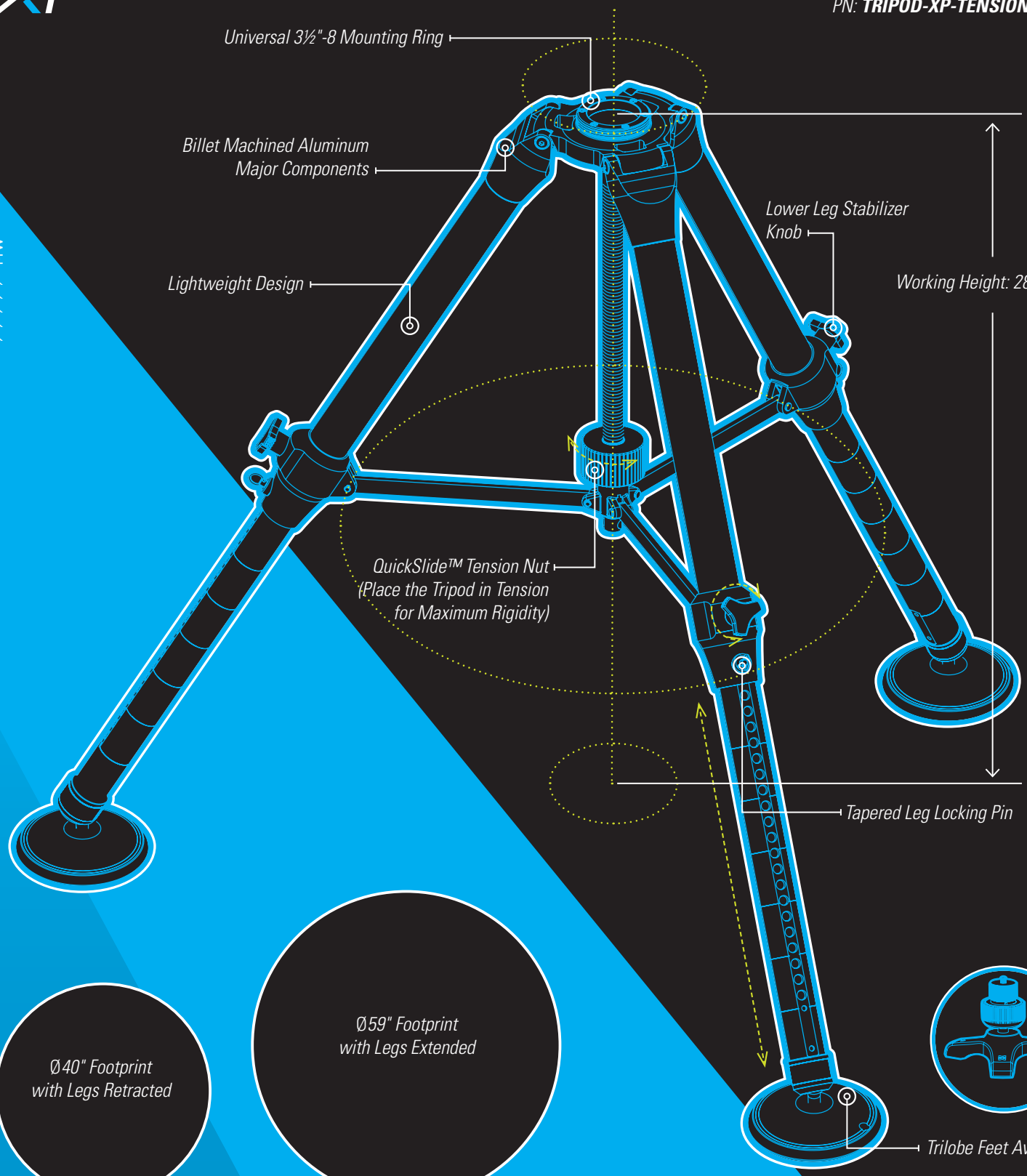

Ø40" Footprint with Legs Retracted

Ø59" Footprint with Legs Extended

TENSIONMAX-XP

www.MetrologyWorks.com

MetrologyWorks, Inc.
105 S.E. Magellan Dr.
Blue Springs, Mo 64014

MetrologyWorks GmbH
Steinstraße 17
14822 Borkheide, Germany